NOTES:

1. PORT ADAPTERS WILL BE SHIPPED LOSE, ATTACHED TO PUMP WITH CABLE TIE AROUND LINK.

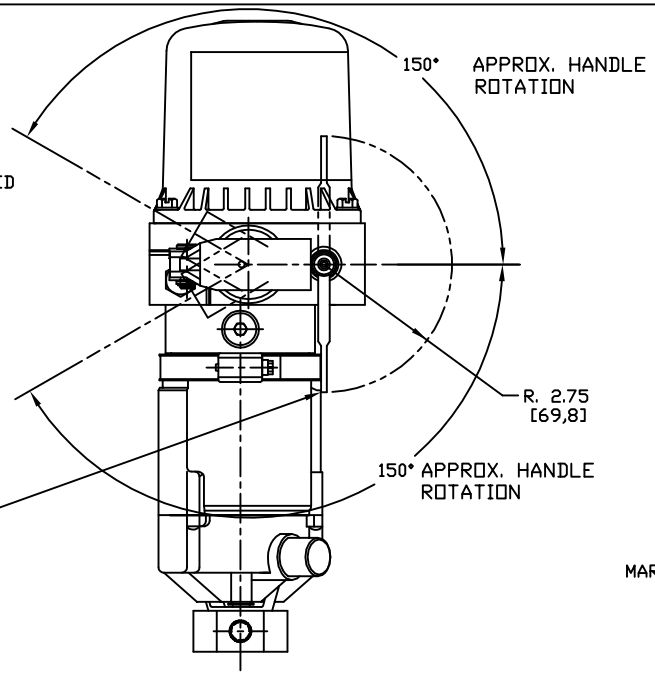

SPECIFICATIONS:

RELIEF VALVE SETTING	4000-4200 PSI [275,9-289,6 BAR]
MAX. OPERATING PRESSURE	5000 PSI [344,8 BAR]
RECOMMENDED OPERATING TEMP.	-30°F TO 130° [-34°C TO 54°C]
PUMP PLUNGER DIA.	.56 [14,2]
PUMP PLUNGER EFFECTIVE AREA	.246 SQ IN [1,59 SQ CM]
STROKE	1.00 [25,4]
VOLUME PER STROKE	.246 CU IN [4,03 CU CM]
AIR PUMP PLUNGER DIA.	.31 [7,9]
RECOMMENDED AIR PRESSURE RANGE	60-120 PSI [4,1-8,3 BAR]
RESERVOIR CAPACITY	35 CU IN [574 CU CM] USEABLE
RESERVOIR VENT RELIEF SETTING	50-75 PSI [3,4-5,2 BAR]
MAX. PORT FITTING TORQUE	10-12 FT LBS
PUMP RETURN ORIFICE DIA.	.018 [0,46]
MAX. MOUNTING BOLT TORQUE	16-19 FT LBS
MIN. MOUNTING BOLT ENGAGEMENT	.50 [12,7]
RECOMMENDED FLUID	PER MIL-H-5606 OR EQUIV. DO NOT USE ATF
WEIGHT	7.8 LBS [3,5 kg]
CORROSION RESISTANCE	250 HRS PER ASTM B117
COATING SPECIFICATIONS	BLACK ANODIZED

MARK DECAL AS SHOWN

VIEW A-A
SCALE 2:1

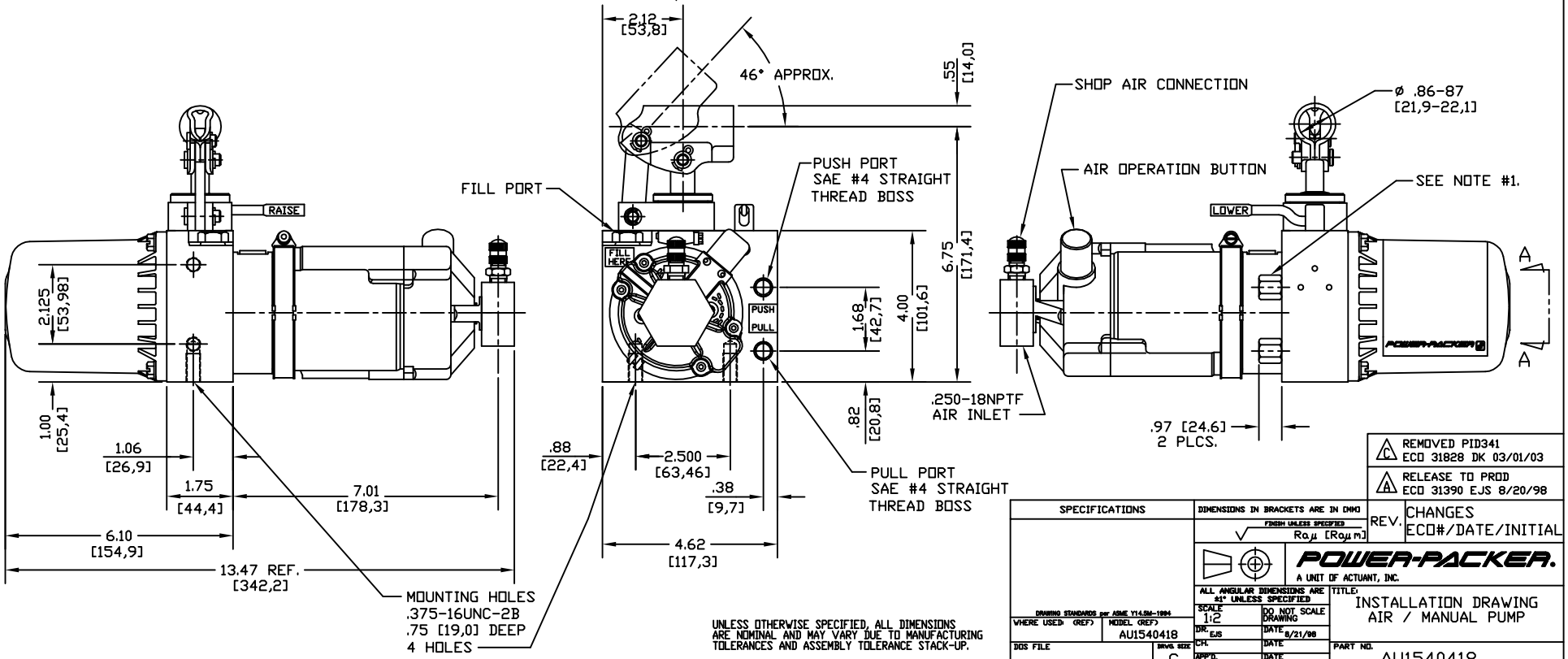

UNLESS OTHERWISE SPECIFIED, ALL DIMENSIONS ARE NOMINAL AND MAY VARY DUE TO MANUFACTURING TOLERANCES AND ASSEMBLY TOLERANCE STACK-UP.

REV.	CHANGES ECO#/DATE/INITIAL
C	REMOVED PID341 ECO 31828 DK 03/01/03
A	RELEASE TO PROD ECO 31390 EJS 8/20/98

SPECIFICATIONS

DIMENSIONS IN BRACKETS ARE IN MMO

FINISH UNLESS SPECIFIED Ra µ [Ra µ m]

POWER-PACKER.
A UNIT OF ACTUANT, INC.

ALL ANGULAR DIMENSIONS ARE ±1° UNLESS SPECIFIED

DRAWING STANDARDS per ASME Y14.5M-1994

WHERE USED: (REF)	MODEL (REF) AU1540418	SCALE 1:2	DO NOT SCALE DRAWING
		DR. EJS	DATE 8/21/98
DOS FILE AU1540418	DRWG. SIZE C	CH.	DATE
		APP'D.	DATE

TITLE: INSTALLATION DRAWING AIR / MANUAL PUMP

PART NO. AU1540418

THIS PRINT AND INFORMATION THEREIN IS CONFIDENTIAL AND PROPRIETARY AND IS THE PROPERTY OF ACTUANT INC. IT IS NOT TO BE COPIED OR REPRODUCED WITHOUT WRITTEN PERMISSION OF ACTUANT.